DESIGN OF COUPLED INDUCTOR BASED BIDIRECTIONAL CONVERTER FOR ELECTRIC VEHICLE

S. KAVIPRIYA[1], Dr. S. VIJAY SHANKAR[2], Mr. V. M.PERIYASAMY[3]

PG Scholar in PED, Department of Electrical and Electronics Engineering, Sona College of Technology, Salem[1]
Professor& Dean (R&D), Department of Electrical and Electronics Engineering, Sona College of Technology, Salem[2]
Assistant Professor, Department of Electrical and Electronics Engineering, Sona College of Technology, Salem[3]

***

Abstract: A novel Bidirectional DC-DC Converters (BDC) allows the need of stepping up and stepping down the voltage levels between two DC sources along with the bidirectional power flow capability. These features of BDC have recently gained increasing focus in the area of energy storage systems for Hybrid Electric Vehicles (HEV), Renewable Energy Systems (RES), Fuel cell energy systems and Uninterruptible Power Supplies (UPS. This type of energy storage will cause a smooth and continuous power flow to the load. However, to perform energy exchange between auxiliary storage device and the rest of system, a DC-DC converter is required as a mediator. Therefore, a BDC should possess flexible control of bidirectional power flow in all modes of operation. Thus, the modeling and the control of bidirectional DC-DC converters becomes an important issue. The basic demands of BDC in such an application require low switching losses, compact design of size and weight which in turn enhances the system efficiency. The main objective of this research work is to exploit a novel bidirectional DC-DC converter topology with low switching loss using suitable control techniques.

Index Terms –: Bidirectional converter, Proportional Integral Controller, coupled inductor.

1. INTRODUCTION

Bidirectional DC-DC Converters (BDCs) allows the benefits in either increasing or decreasing the level of voltage between two DC sources along with the bidirectional power flow capability. These features of BDC have recently gained increasing focus in the field where an energy storage system is required for future utilization. This type of energy storage will supply an uninterrupted power to the load connected to it. However, to perform transformation of energy between the system and the auxiliary storage device, a DC-DC converter is required. Therefore, a BDC should possess flexible control of bidirectional power flow in all modes of operation. Thus, the modeling and the control of BDC becomes an important issue. In order to overcome these problems, solutions are proposed in this research work.

1.1 BIDIRECTIONAL DC-DC CONVERTER

The basic configuration of bidirectional DC-DC converters is shown in Figure 1.1. The BDC can be classified into two types namely boost type and buck type which is based on the auxiliary storage device position. The energy storage device is positioned on the high voltage side in a buck type whereas in boost mode, it is retained on the low voltage side.

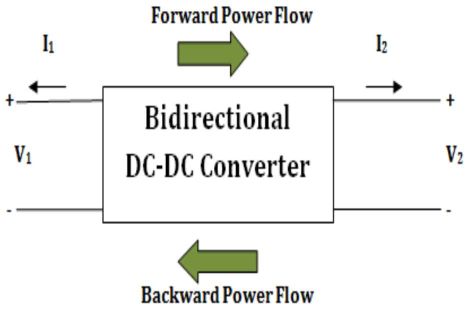

Fig. 1.1 Basic configuration of BDC

Basically BDCs are divided into two types, Non-isolated Bidirectional DC-DC Converters (NBDCs) and Isolated Bidirectional DC-DC Converters (IBDCs) meeting the requirements of different applications.

1.2 NON-ISOLATED BIDIRECTIONAL DC-DC CONVERTERS

A non-isolated bidirectional DC-DC converter shown in Figure 1.2 is obtained from the unidirectional DC-DC converters. Here, the bidirectional switches are implemented instead of a unidirectional switch. Generally, the diodes present in the conventional converters, do not have the capability of controlling power flow in either direction.

In order to overcome this constraint in the conventional converter, Power MOSFET or an IGBT with anti-parallel diode across them is introduced. These semiconductor devices allow the conduction of current in both forward and reverse direction and thereby act as a bidirectional switch with the controlled switching operation.

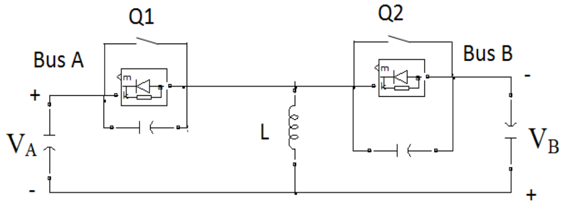

Fig 1.2 Basic structure of NBDC

The operation of the NBDC is as follows. In the above figure, the inductor functions as energy transfer component.

For every switching cycle, the component is charged via the source side active switch. The inductor is charged for the duration of $T_{on} = \delta T$, where T is the switching period and δ is duty cycle. Then the inductor releases the energy stored in it to the load during the period, $T_{off} = (1- \delta)$ T.

The advantages of NBDC converter are as follows,

- Higher efficiency.
- Reduction in weight and cost. Hence, implemented in the areas where weight and size is the primary consideration in designing the system.
- When compared with isolated BDCs, it is very simple.

Some of its limitations are given as follows,

- Structure becomes impractical, when the voltage ratio is more.
- Galvanic isolation is less between two sides.

1.3 SOLATED BIDIRECTIONAL DC-DC CONVERTERS

The structure of an IBDC is shown in Figure 1.3. It consists of two DC-AC converters namely, Converter A and Converter B with high-frequency switching and a high-frequency transformer of ratio 1: n. This transformer provides a galvanic isolation between the two converters and also helps in voltage matching between them. Thus both DC-AC converters should possess bidirectional energy transfer capability because power flow transfer is required in either direction from Mode A-B or Mode B-A.

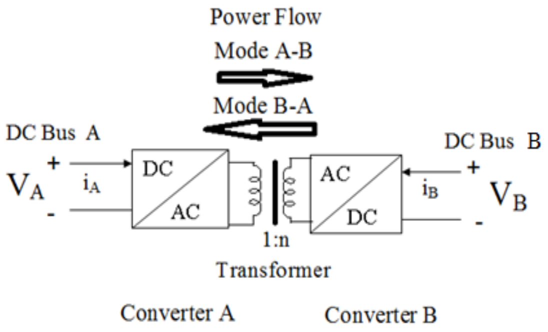

Fig 1.3 Basic structure of an IBDC

Some of the merits of IBDC can be listed as follows,

- Since the structure of the transformer is very simple, it is easy to design and requires less maintenance.
- The switch stress on both the primary and secondary sides is equal.
- Soft switching can be accomplished without any use of active or passive components.
- There will be fast dynamic behavior due to absence of extra added passive elements.
- Some of its demerits are as follows,
- During light load condition, soft switching nature of the converter may fail.
- The output current passing through DC buses contains high ripple content. In order to overcome this problem, a suitable filtering deign is required. This makes the circuit complicated.
- This type of converters is very sensitive to small variation in the flux value, when it is operated under high voltage.

1.4 CONVENTIONAL DC-DC BOOST/BUCK CONVERTER

The bidirectional DC-DC converter transfer power between the two sources by increasing or decreasing the voltage levels depending upon the requirements. In IBDC, isolation is required between the two circuits. For this purpose, transformers are utilized. This IBDC comprises of half bridge and full bridge type converters. By adjusting the transformer ratio, high voltage gain can be achieved. Fundamentally, the NBDC comprises of conventional boost/buck and coupled inductor types. The coupled inductor converter can achieve high voltage gain without control complexity.

Generally for the requirement of high voltage gain in boost/buck converters, more switches are implemented. When number of switches gets increased, the design of converter becomes complicated. A conventional bidirectional DC-DC boost/buck converter shown in Figure 1.4 proposed by Camara et al. (2010) which is simple in structure and easy to control. During buck and boost mode of converter operation, the switches operate under hard switching which gives rise to high switching losses.

This in turn reduces the efficiency of the system. Hence, to minimize these switching losses, many soft switching approaches such as ZVS (Zero Voltage Switching) and ZCS (Zero Current Switching) have been presented.

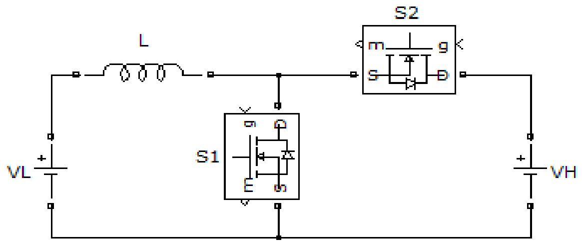

Fig 1.4 conventional DC-DC boost/buck converter

2. OPERATION

2.1. WORKING PRINCIPLE

2.1.1 Description of the proposed converter

The configuration of proposed CONTROLLER is shown in Fig.2.1. It comprises of two switches namely S1 and S2 and has a coupled inductor which has same number of winding in both primary and secondary side. The switch S3 is the synchronous rectifier. As the primary and secondary winding turns are same in coupled inductor is same, then the inductance of the coupled inductor in both the primary and secondary side can be given as follows,

$$L_1 = L_2 = L \qquad (1)$$

Thus, the mutual inductance M of the coupled inductor is given by

$$M= k \sqrt{L_1 L_2} = kL \qquad (2)$$

Where k - coupling coefficient of the coupled inductor.

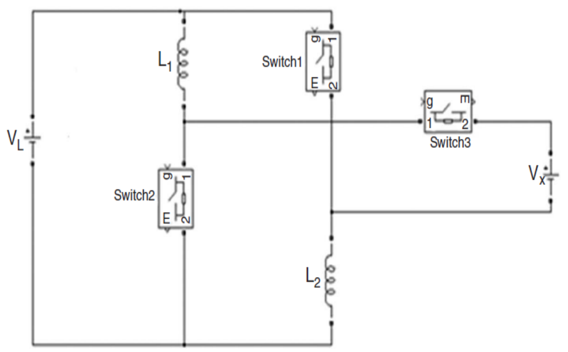

Fig 2.1 circuit configuration of the proposed controller

Thus PWM technique is used to control the switches S1 and S2 simultaneously and the switch S3 is the synchronous rectifier in the boost mode. Similarly, during buck mode operation, the PWM technique is used to control the switch S3 and the switches S1 and S2 acts as a synchronous rectifiers. When compared with conventional bidirectional DC-DC converter, the proposed CONTROLLER converter has improved voltage gains in both boost and buck mode.

2.1.2 CCM Operation

Mode 1: During this time interval [*t*0, *t*1], *S*1 and *S*2 are turned on and *S*3 is turned off. The energy of the low-voltage side *VL* is transferred to the coupled inductor. Meanwhile, the primary and secondary windings of the coupled inductor are in parallel. The energy stored in the capacitor *CH* is discharged to the load.

Mode 2: During this time interval [t1, t2], S1 and S2 are turned off and S3 is turned on. The low-voltage side VL and the coupled inductor are in series to transfer their energies to the capacitor CH and the load. Meanwhile, the primary and secondary windings of the coupled inductor are in series. Current flow path of the proposed converter in step-up mode

2.1.3 DCM Operation

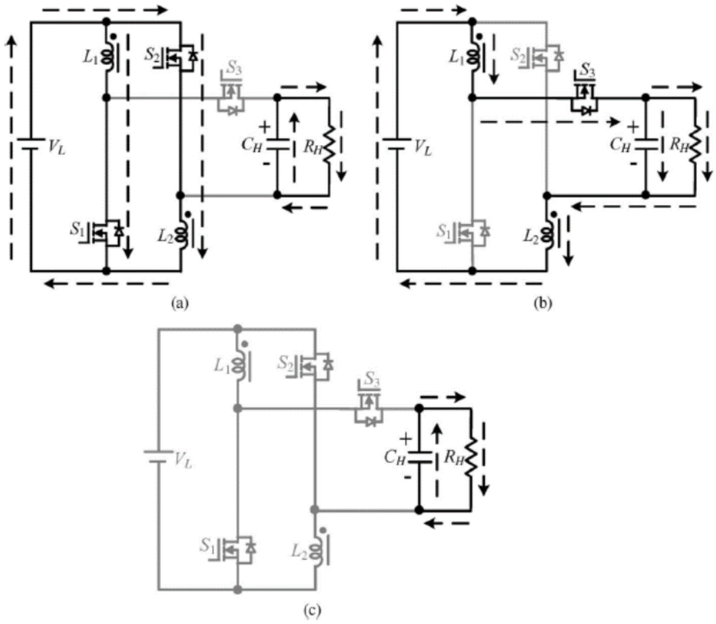

Fig 2.2 Current flow path of proposed converter in step-up mode. (a) Mode 1, (b) Mode 2, (c) Mode 3 for DCM operations

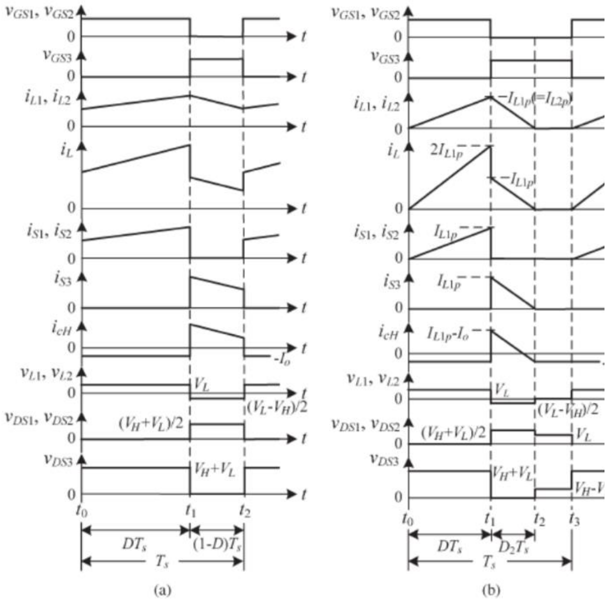

Fig 2.3 Wave forms of the proposed converter in step-up mode. (a) CCM operation. (b) DCM operation

3. STUDY OF PROPOSED CONTROLLER IN BOOST MODE UNDER OPEN LOOP CONTROL

The proposed controller operating in open loop system for a boost mode is performed successfully with quad-filter which is shown in Figure 3.1. The simualted waveform of input voltage, output voltage and output power in the forward power flow direction is shown in Figure 3.2. The input voltage is kept at 15V for RLE load. The output is observed as 30V with voltage ripple less than 1%. It also demonstrates the controlled response of the proposed converter, where the input voltage is suddenly incremented to 20V at time t=0.5secs and the corresponding results are presented.

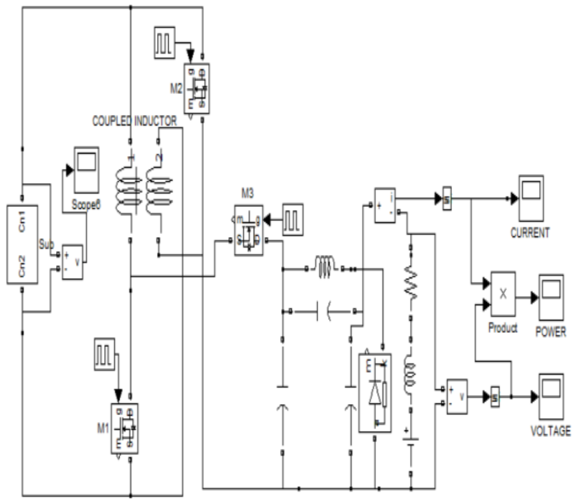

Fig 3.1 Simulink model of the proposed controller in open loop control for boost mode

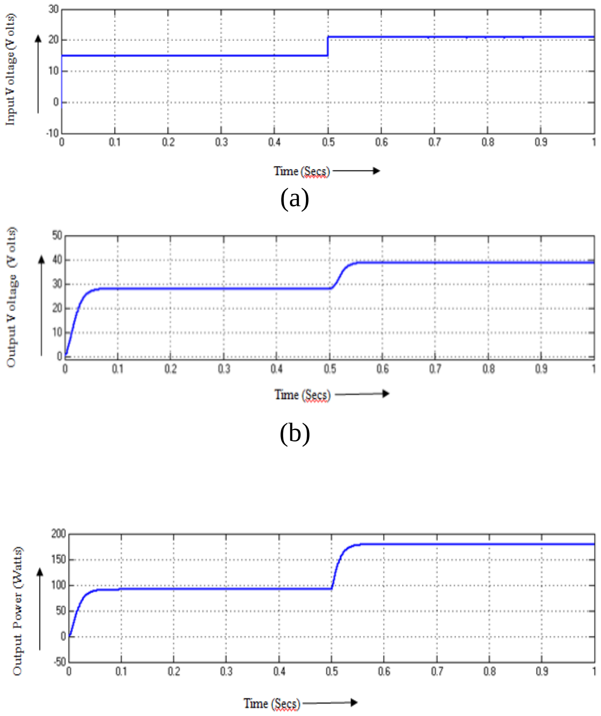

(a)

(b)

(c)

Fig 3.2 a) b) c) Analysis of proposed CONTROLLER in open loop control for boost mode

For the step input change of 5V, the corresponding output voltage changes by 10V and the load current increases by 1A. The power increases from 90Watts to 170Watts.The increase in power is due to the increase in the input voltage.

4. STUDY OF PROPOSED CONTROLLER IN BOOST MODE UNDER CLOSED LOOP CONTROL

In order to improve the performance of the proposed converter, controllers are implemented. Simulation results under closed loop control in boost mode are discussed with an input voltage of 15V. The parameter settings for controllers are obtained using Zigler and Nicols method and are used for the simulation study. The simulink diagram of closed loop system with PI controller is shown in Figure 4.2. The parameter settings used for the simulation study are Kp=0.5010 and Ki=4.8940 . Input voltage of the converter is 15V DC. Figure 4.2 demonstrates the converter output voltage for the nominal case of set value 30V; the controller response has reached its set value at t=0.81secs. The input voltage is suddenly incremented to 20V at time t=0.5secs. The output voltage increases and then reduces to the required value. The steady state error in output voltage is 1V.This is much less than that of the open loop system. This can be further reduced by changing the amplitude and frequency of the saw tooth voltage. The peak overshoot in the output is 7V.

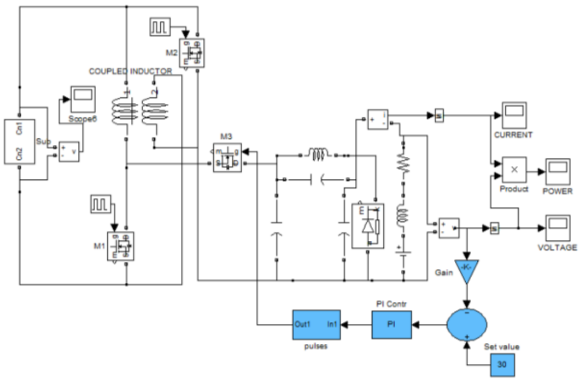

Fig 4.1 Simulink model of the proposed CONTROLLER with PI controller in boost mode

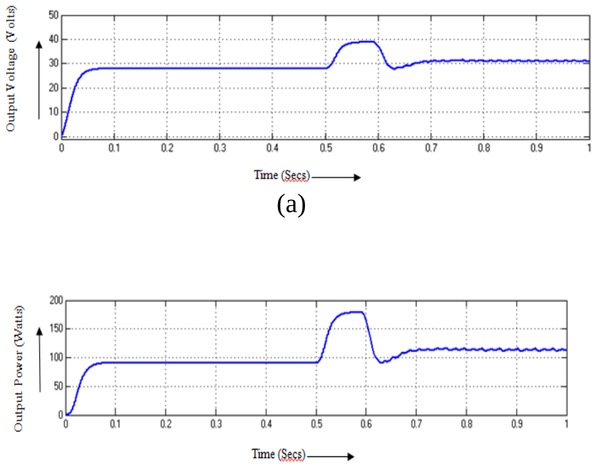

(a)

(b)

Fig 4.2 a) b) Analysis of proposed CONTROLLER with PI controller

During this period, the output power also gets varied. From the waveforms, it is seen that the output voltage regulated by PI controller during servo response reaches its steady state condition.

5. FUZZY CONTROLLER

The Simulink model of the controller with Fuzzy controller has been illustrated in Figure 5.1. The triangular membership functions (MFs) are chosen to evaluate the degree of membership of the input crisp values. The output of the fuzzy controller is the control signal which is used to produce modulating pulses to the switches of the converter.

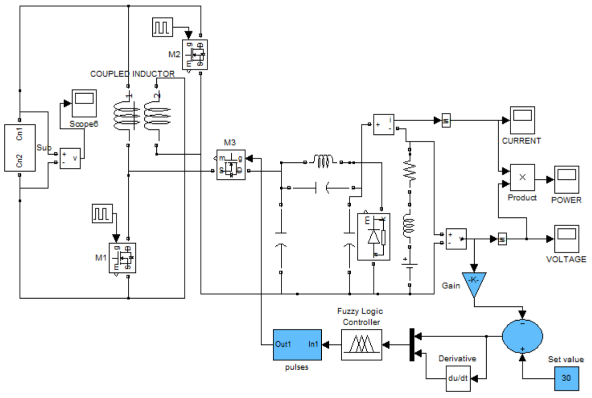

Fig 5.1 Simulink model of the proposed controller with Fuzzy controller in boost mode

The proposed fuzzy system consists of five MFs for error (E), change in error (CE), and output control signal (u). In this work, mamdani fuzzy reasoning method is used to obtain the inference result from a system. The fuzzy reasoning strategy of this method is based on the MAX-MIN composition.

Table .1 Rule base

e(n)/ce(n)	NB	NS	ZE	PS	PB
NB	NB	NB	NB	NS	ZE
NS	NB	NB	NS	ZE	PS
ZE	NB	NS	ZE	PS	PB
PS	NS	ZE	PS	PB	PB
PB	ZE	PS	PB	PB	PB

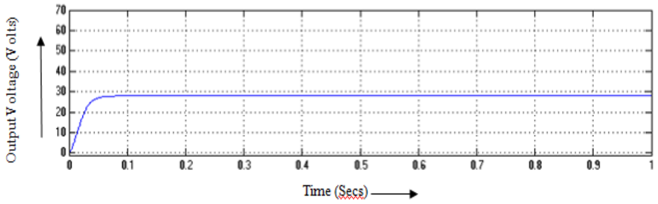

(a)

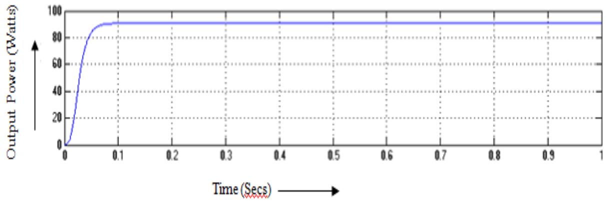

(b)

Fig 5.2 Analysis of proposed NBDCCI with Fuzzy controller in boost mode

The result analysis clearly shows that at any instant of change in input voltage, output voltage get stabilizes at faster rate to the desired value without any overshoot. Thus, the waveform justifies the excellent dynamic performances of the controller.

6. HARDWARE KIT

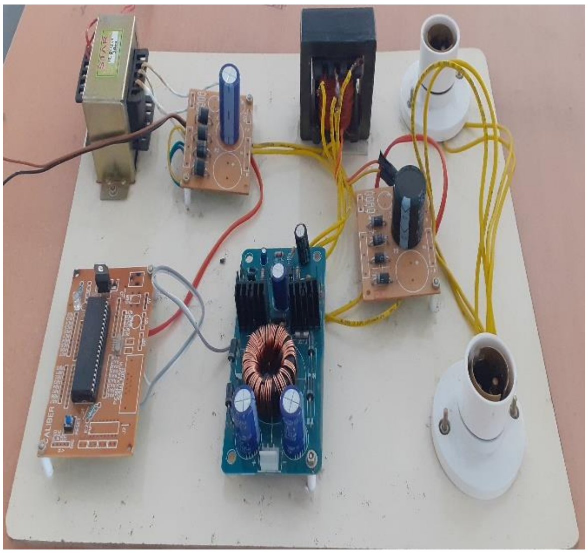

Fig 6.1 Experimental setup of proposed system

6.1 Results and discussion

The comparison of the response of proposed controller in boost mode with conventional and artificial intelligent controllers are summarized in Table 4.2.The comparison is done in terms of rise time, settling time, peak time and steady state error.

The comparison indicates that the response with fuzzy controller is superior to that of conventional controller because the output power and voltage reaches steady state condition without any fluctuation.

Table.2 Comparison of responses with various controllers in boost mode

Controllers for NBDCCI in Boost mode	Rise time Tr secs	Settling time Ts secs	Peak time Tp secs	Steady state error Ess Secs
PI	0.050	0.81	0.53	0.8
FUZZY	0.01	-	-	0.05

Thus, the choice of optimal control for the proposed converter operating in boost mode is chosen with fuzzy controller which provides faster response with virtually no overshoots when compared to other controller.

7. CONCLUSION

7.1 CONCLUSION

In this work, the performance of proposed non isolated coupled inductor was presented. Simulation was done for with various controllers and Comparative analysis were presented. The proposed converter has higher step-up and step-down voltage gains and lower average value of the switch current than the conventional bidirectional boost/buck converter.

7.2 SCOPE OF FUTURE RESEARCH

1. The converter may be analyzed by enhancing other artificial controllers like neural controllers, hybrid genetic algorithms and so forth for optimizing the power flows, and loss occurred in the systems.
2. To implement and evaluate these proposed systems in different scenarios with several load conditions.
3. It can be implemented in microgrid and investigate with this proposed system as in real time.

REFERENCES

[1] Biao Zhao, Qiang Song, Wenhua Liu, Guowei Liu & Yuming Zhao, 2015 'Universal High-Frequency-Link Characterization and Practical Fundamental-Optimal Strategy for Dual-Active-Bridge DC-DC Converter Under PWM Plus Phase-Shift Control,' IEEE Transactions on Power Electronics, vol. 30, no. 12, pp. 6488-6494.

[2] Hosseini, S, H, Sabahi, M, Sedaghati, F & Gharehpetian, G, B, 2015 'A new extended topology for dual active bridge DC-DC converter,' IEEE Electrical Power and Energy Conference (EPEC), pp. 391-396.

[3] Jin-san Kim, Feel-soon Kang, Sun-phil Kim & Sung-Jun Park, 2015 'Bidirectional DC-to-DC converter for motor control unit of electric vehicle,' 41st Annual Conference of the IEEE Industrial Electronics Society, pp. 927-931.

[4] Lingxiao Xue, Zhiyu Shen, Dushan Boroyevich, Paolo Mattavelli & Daniel Diaz, 2015 'Dual Active Bridge-Based Battery Charger for Plug-in Hybrid Electric Vehicle With Charging Current Containing Low Frequency Ripple,' IEEE Transactions on Power Electronics, vol. 30, no. 12, 7299-7307.

[5] Mehnaz Akhter Khan, Adeeb Ahmed, Iqbal Husain, Yilmaz Sozer & Mohamed Badawy, 2015 'Performance Analysis of Bidirectional DC–DC Converters for Electric Vehicles,' IEEE Transactions on Industry Applications, vol. 51, no. 4, pp. 3442-3452.

[6] Kafeel Ahmed Kalwar, Muhammad Aamir & Saad Mekhilef 2015, 'Inductively coupled power transfer (ICPT) for electric vehicle charging,' Renewable and Sustainable Energy Reviews, vol. 47, pp. 462-475.

[7] Punitha, N & Saranya, T, 2015 'High efficiency fly-back converter using resistance compression network,' International Conference on Innovations in Information, Embedded and Communication Systems, pp. 1-6.

[8] Saranya Sasi & Veena Wilson. 2015 "Single-phase high gain DC/DC converter with multiplier cell for lighting applications using fuzzy controller", IEEE Conference on Green Engineering and Technologies, India, pp. 1-6.

[9] Sivaprasad, A, Jijo Joseph, Kumaravel, S & Ashok, S, 2015 'Design and analysis of a dual input DC-DC converter for hybrid electric vehicle,' IEEE International Conference on Signal Processing, Informatics, Communication and Energy Systems, pp. 1-5.

[10] Aylapogu Pramod Kumar, V, V, Subrahmanya Kumar Bhajana & Pavel Drabek, 2016 'A novel ZCS interleaved bidirectional buck-boost DC-DC converter for energy storage applications,' International Conference on Applied Electronics (AE), pp. 180-185.

[11] Hossein Ardi, Ali Ajami, Faezeh Kardan & Shahla Nikpour Avilagh, 2016 'Analysis and Implementation of a Nonisolated Bidirectional DC–DC Converter with High Voltage Gain,' IEEE Transactions on Industrial Electronics, vol. 63, no. 8, pp. 4878-4888.

[12] Anupam Kumar, A, H, Bhat & Pramod Agarwal, 2017 'Comparative analysis of dual active bridge isolated DC to DC converter with flyback converters for bidirectional energy transfer, Recent Developments in Control, Automation & Power Engineering, pp. 382-387.

[13] Bhimisetty Manoj Kumar, Anupam Kumar, A, H, Bhat & Pramod Agarwal, 2017 'Comparative study of dual active bridge isolated DC to DC converter with single phase shift and dual phase shift control techniques,' Recent Developments in Control, Automation & Power Engineering, pp. 453-458.

[14] Hyeonju Jeong, Minho Kwon & Sewan Choi, 2017 'A high gain non-isolated soft-switching bidirectional DC-DC converter with PPS control,' IEEE Energy Conversion Congress and Exposition, pp. 1723-1727.

[15] Krishnan, K, Gokul, Babu, P, Emmanuel, S, Ashok, S, Kumaravel, 2017 'Design and control of non-isolated bidirectional DC-DC converter for energy storage application, IEEE International Conference on Recent Trends in Electronics, Information & Communication Technology, pp. 289-293.

[16] Wu Chen, Guangjiang Wang & Xu Zhu, 2018 'A family of bidirectional DC/DC converters suitable for asymmetrical power flow requirement,' IEEE Journal of Solid-State Circuits, vol. 53, no. 11, pp. 3314-3326.

[17] Anderson Vieira, Luan Mazza, Fernando Antunes & Demercil Oliveira, 2018 'Bidirectional dual-active-bridge DC-DC converter for vehicle-to-grid applications in DC microgrids,' Simposio Brasileiro de Sistemas Eletricos, pp. 1-6.

[18] Chaochao Song, Alian Chen, Jie Chen, Chunshui Du & Chenghui Zhang, 2018 'Optimized modulation scheme for dual active bridge DC-DC converter,' IEEE Applied Power Electronics Conference and Exposition, pp. 3569-3574.

[19] Diksha, S, Ramteke, Manisha, B & Gaikwad, 2018 'Isolated DC-DC Converter Fed DC Motor for Bidirectional Electric Vehicular Application,' International Conference on Smart Electric Drives and Power System, pp. 33-37.